DRAWING NUMBER/SHEET NUMBER
F2466

REMOVE ALL BURRS & SHARP EDGES

IF IN DOUBT ASK!

3RD ANGLE PROJECTION

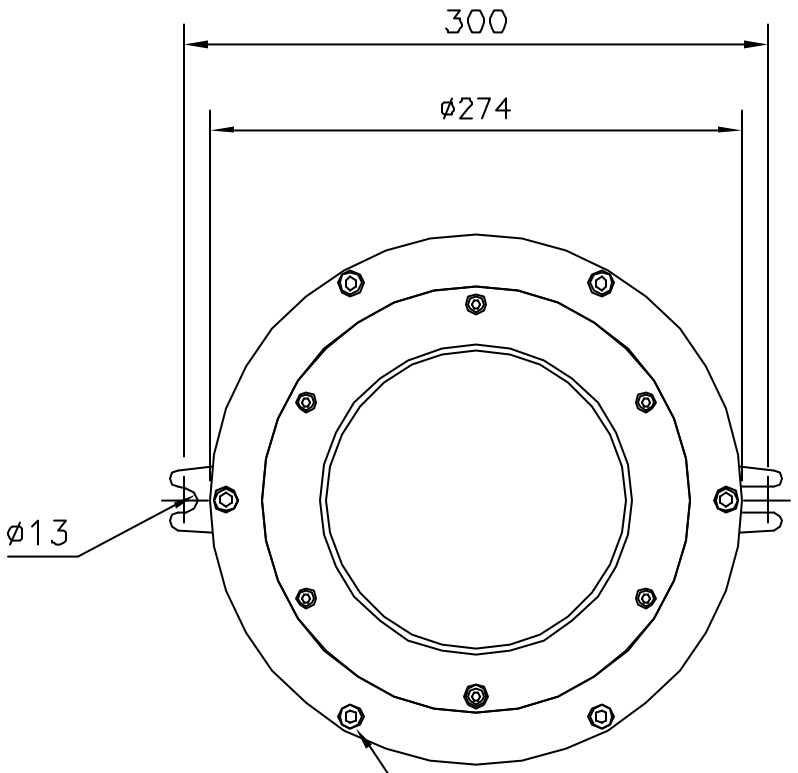

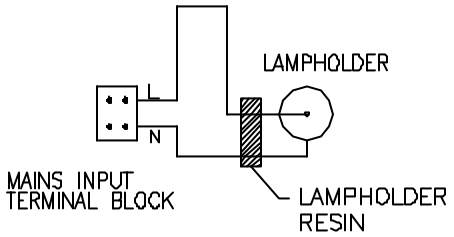

TYPICAL GLS
WIRING DIAGRAM

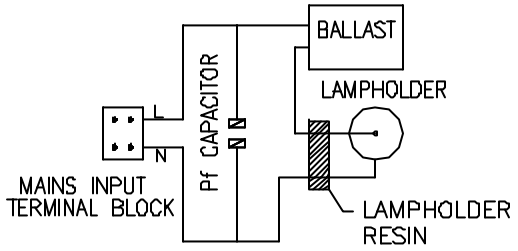

TYPICAL SON & MBI
NO IGNITOR WIRING DIAGRAM
LAMP WITH INTERNAL IGNITOR

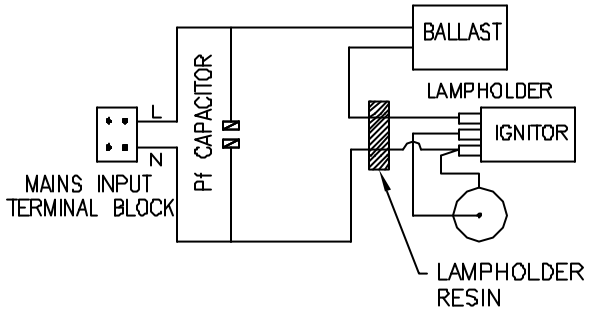

TYPICAL SON & MBI
WIRING DIAGRAM

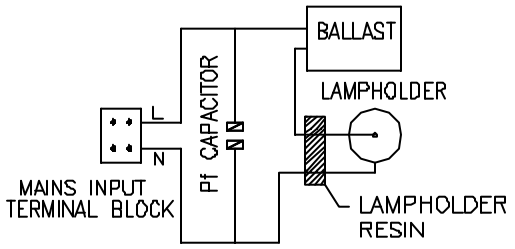

TYPICAL MBFU
WIRING DIAGRAM

LAMP TYPE	T3	T4	T5	T6	DUST TEMPERATURE	INCOMING CABLE TEMP. RISE ABOVE AMBIENT
	PENDANT MOUNTING	PENDANT MOUNTING	PENDANT MOUNTING	PENDANT MOUNTING	PENDANT MOUNTING	
50W SON	70°C	70°C	50°C	35°C	50°C	24°C
70W SON	70°C	70°C	50°C	35°C	50°C	24°C
150W SON*	47°C	25°C	N/A	N/A	75°C	40°C
70W MBI	70°C	70°C	50°C	35°C	50°C	24°C
100W MBI	60°C	50°C	N/A	N/A	80°C	38°C
150W MBI	47°C	25°C	N/A	N/A	75°C	40°C
50W MBF	70°C	70°C	50°C	35°C	50°C	24°C
80W MBF	68°C	68°C	35°C	20°C	60°C	31°C
125W MBF	60°C	50°C	N/A	N/A	80°C	38°C
200W GLS MAX	65°C	65°C	35°C	N/A	65°C	38°C

DISCHARGE LAMPS CAN BE ELLIPTICAL OR TUBULAR IN SHAPE
*LAMP MANUFACTURED BY IWASAKI LIGHTING ONLY

NOTES

PRODUCT PROTECTION :– EEx de IIC T6
CERTIFICATE No. SIRA04ATEX1220
CODING :– Ex II 2 G D EEx de IIC T(SEE TABLE)
TERMINALS :– UP TO 6mm SQ CONDUCTOR
CABLE ENTRIES :– TWO x M20 ENTRIES
INGRESS PROTECTION :– IP66/67
BODY MATERIAL :– ALUMINIUM LM6 GRADE PAINTED SMOKE GREY
GLASS & COVER : – TOUGHENED WELLGLASS WITH ALUMINIUM LM6 GRADE PAINTED SMOKE GREY COVER
VOLTAGE & FREQUENCY :– GLS 250V MAX a.c/d.c 50/60Hz
DISCHARGE 220V, 230V, 240V & 250V 50/60Hz a.c. ONLY
COMPACT FLUORESCENT 220 – 250V a.c/d.c 50/60Hz

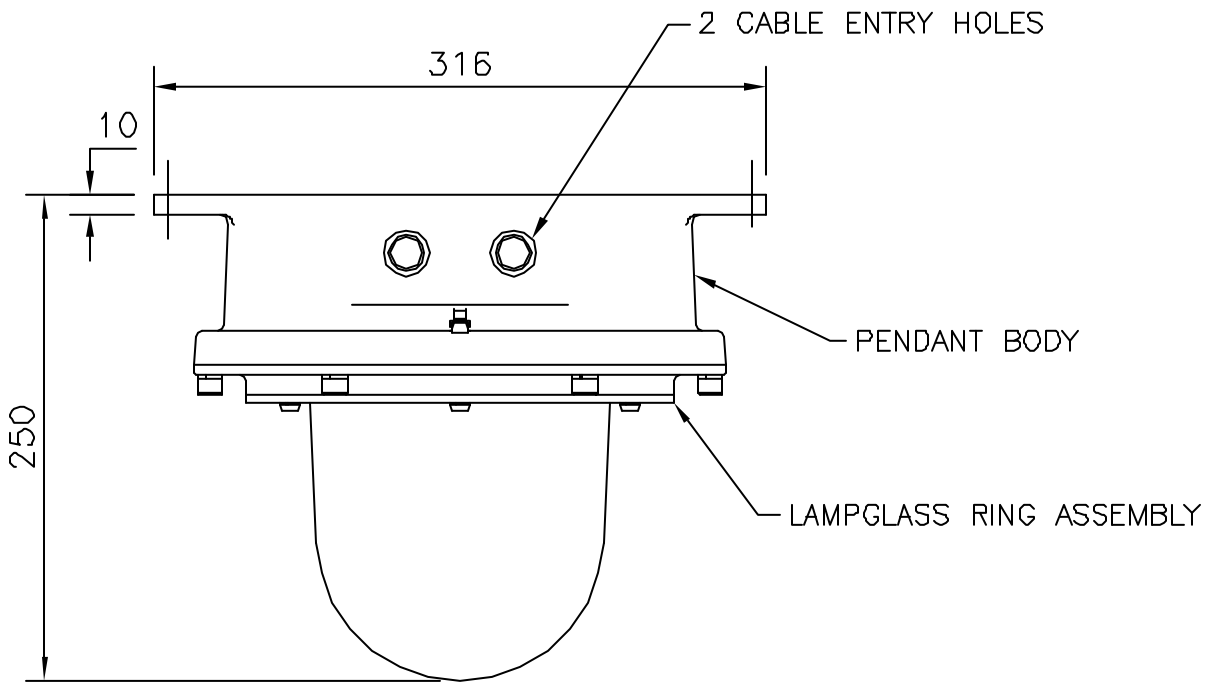

DCF No	MOD BY	CHANGE	ISSUE	DATE

Victor Lighting

Victor Lighting
PO Box 5571,
Glasgow G52 9AH
Scotland
Tel:0141 810 9644 Fax:0141 810 9642

DRAWN	JTC
CHECKED	
APPROVED	
DATE	

REF. DRGS.–

WITHOUT OUR PERMISSION THIS DRAWING, WHICH IS OUR COPYRIGHT, MAY NOT BE REPRODUCED OR MADE AVAILABLE TO THIRD PARTIES.
AUTHORISATION IS GIVEN TO _____ TO REPRODUCE THIS DRAWING FOR INTERNAL PURPOSES ONLY.

MATERIAL: ALUMINIUM LM6
TOLERANCE:
FINISH: PAINTED SMOKE GREY
SURFACE ROUGHNESS:
DIMS. IN MM
SCALE –

TITLE
VL147 PENDANT WELLGLASS GA

DRAWING NUMBER/SHEET NUMBER
F2466 1 OF 1