DRAWING NUMBER/SHEET NUMBER
F2483

REMOVE ALL BURRS & SHARP EDGES

IF IN DOUBT ASK!

3RD ANGLE PROJECTION

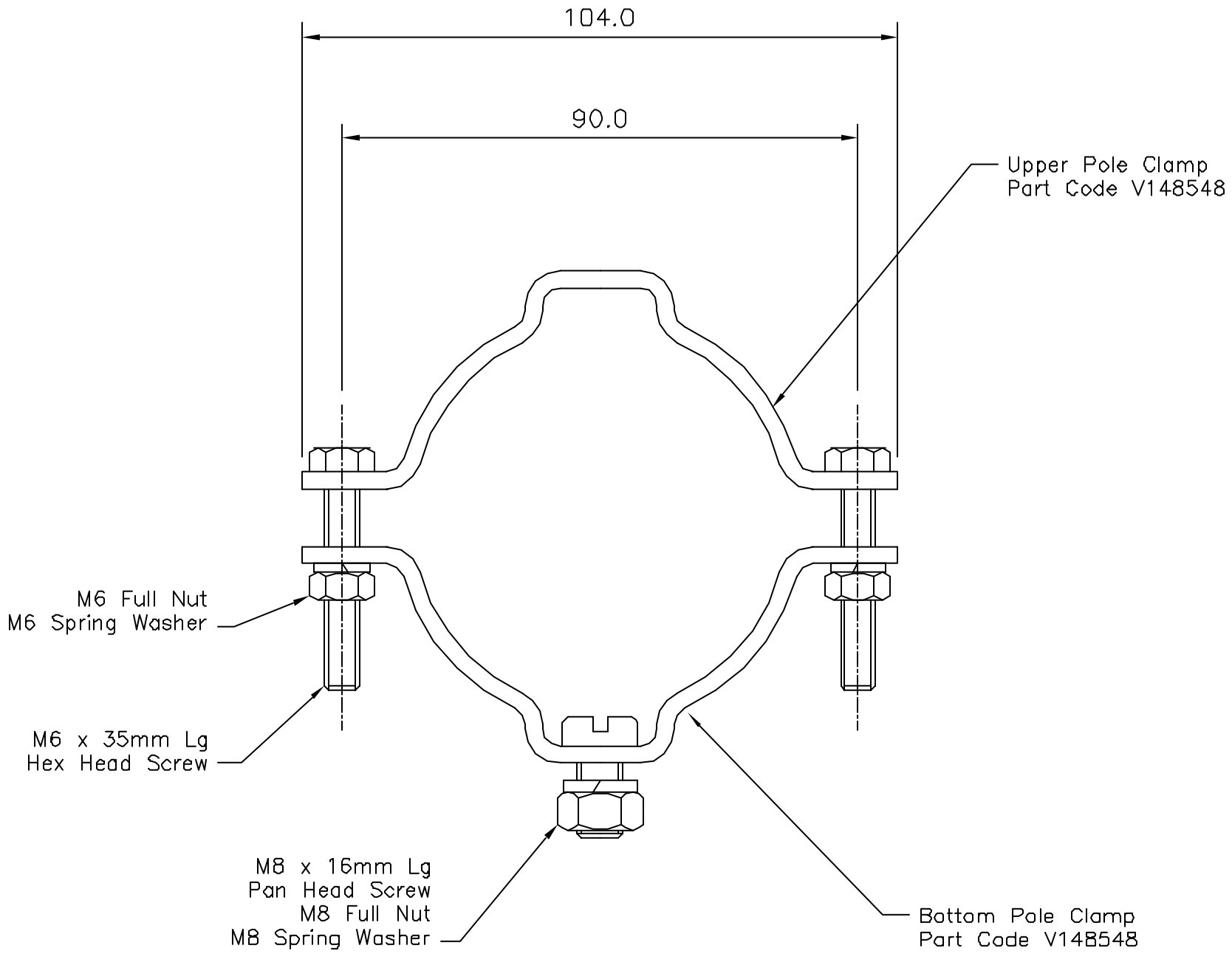

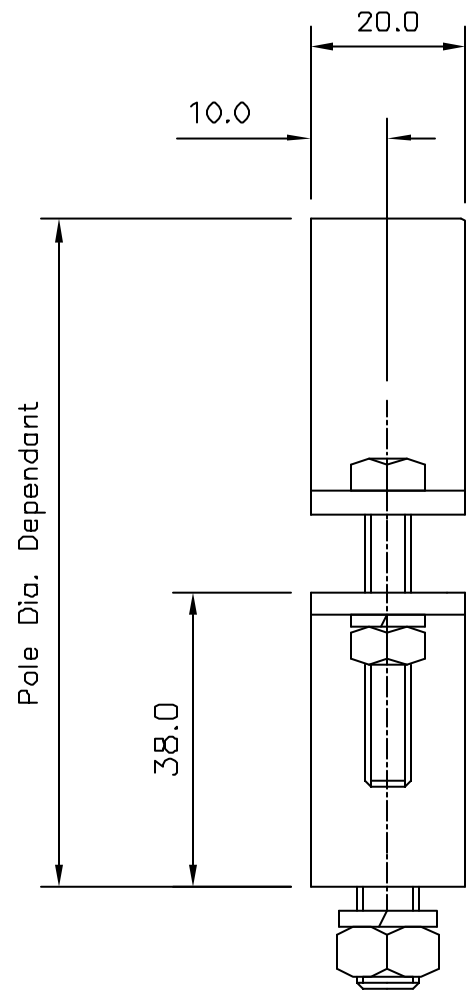

Part code for Pole Clamp is for a set,
ie Two sets of components stated above
for each fitting.

DCF No	MOD BY	CHANGE	ISSUE	DATE

Victor Lighting

Victor Lighting
PO Box 5571,
Glasgow G52 9AH
Scotland
Tel:0141 810 9644 Fax:0141 810 9642

DRAWN	JTC
CHECKED	
APPROVED	
DATE	

REF. DRGS.–

WITHOUT OUR PERMISSION THIS DRAWING, WHICH IS OUR COPYRIGHT, MAY NOT BE REPRODUCED OR MADE AVAILABLE TO THIRD PARTIES.
AUTHORISATION IS GIVEN TO _____ TO REPRODUCE THIS DRAWING FOR INTERNAL PURPOSES ONLY.

MATERIAL: Stainless Steel

TOLERANCE:

FINISH: Self

SURFACE ROUGHNESS:

DIMS. IN MM

SCALE –

TITLE
60–70mm Dia Pole Clamp
SEXCE–00005

DRAWING NUMBER/SHEET NUMBER
F2483 1 OF 1